SILICON TRANSISTORS

SEMICONDUCTORS

NPN PNP TYPE			Maximum Ratings				Electrical Characteristics At T_J=25°C					
P_D=0.25 W @ T_a=25°C Case: SOT-25	P_D=0.25 W @ T_a=25°C Case: TO-92	P_D=0.2 W @ T_a=25°C Case: TO-106	V_{CBO} V	V_{CEO} V	V_{EBO} V	I_C mA	h_{FE} @ V_{CE}=5 V I_C=2 mA min/max	$V_{CE(sat)}$ @ I_C=10 mA I_B=0.5 mA max V	f_T typ MHz	I_{CBO} typ nA	C_{ob} typ pF	NF @ 1 KHz max dB
BC147	147	EBC147	50	45	6	200	110/450	0.25	300	15	25	10
BC147A	147A	EBC147A	50	45	6	200	110/220	0.25	300	15	2.5	10
BC147B	147B	EBC147B	50	45	6	200	200/450	0.25	300	15	2.5	10
BC148	148	EBC148	30	20	5	200	110/800	0.25	300	15	2.5	10
BC148A	148A	EBC148A	30	20	5	200	110/220	0.25	300	15	2.5	10
BC148B	148B	EBC148B	30	20	5	200	200/450	0.25	300	15	2.5	10
BC148C	148C	EBC148C	30	20	5	200	420/800	0.25	300	15	2.5	10
BC149	149	EBC149	30	20	5	200	200/800	0.25	300	15	2.5	4
BC149B	149B	EBC149B	30	20	5	200	200/450	0.25	300	15	2.5	4
BC149C	149C	EBC149C	30	20	5	200	420/800	0.25	300	15	2.5	4
BC157	157	EBC157	50	45	5	200	75/260*	0.3	150	100	4	10
BC157A	157A	EBC157A	50	45	5	200	125/260*	0.3	150	100	4	10
BC157B	157B	EBC157B	50	45	5	200	240/500*	0.3	150	100	4	10
BC158	158	EBC158	30	25	5	200	125/500*	0.3	150	100	4	10
BC158A	158A	EBC158A	30	25	5	200	125/260*	0.3	150	100	4	10
BC158B	158B	EBC158B	30	25	5	200	240/500*	0.3	150	100	4	10
BC159	159	EBC159	25	20	5	200	125/500*	0.3	150	100	4	4
BC159A	159A	EBC159A	25	20	5	200	125/260*	0.3	150	100	4	4
BC159B	159B	EBC159B	25	20	5	200	240/500*	0.3	150	100	4	4

* Small signal current gain at 1 KHz

TYPE NPN PNP	Maximum Ratings					Electrical Characteristics At T_J=25°C							
	P_D T_a=25°C W	V_{CBO} V	V_{CEO} V	V_{EBO} V	I_C mA	h_{FE} @ V_{CE}=5V I_C=2 mA min	max	$V_{CE(sat)}$ @ I_C=10 mA I_B=0.5 mA max V	f_T (typ) MHz	I_{CBO} (typ) nA	C_{ob} (typ) pF	N_F max dB	Case
BC182	0.3	60	50	5	100	125 *	500 *	0.25	150	15	5	10	TO-92
BC182A	0.3	60	50	5	100	125 *	260 *	0.25	150	15	5	10	TO-92
BC182B	0.3	60	50	5	100	240 *	500 *	0.25	150	15	5	10	TO-92
BC183	0.3	45	30	5	100	125 *	900 *	0.25	150	15	5	10	TO-92
BC183A	0.3	45	30	5	100	125 *	260 *	0.25	150	15	5	10	TO-92
BC183B	0.3	45	30	5	100	240 *	500 *	0.25	150	15	5	10	TO-92
BC183C	0.3	45	30	5	100	450 *	900 *	0.25	150	15	5	10	TO-92
BC184	0.3	45	30	5	100	240 *	900 *	0.25	150	15	5	10	TO-92
BC184B	0.3	45	30	5	100	240 *	500 *	0.25	150	15	5	10	TO-92
BC184C	0.3	45	30	5	100	450 *	900 *	0.25	150	15	5	10	TO-92
BC212	0.3	60	50	5	200	60 *	400 *	0.25	200	15	10	10	TO-92
BC212A	0.3	60	50	5	200	100 *	300 *	0.25	200	15	10	10	TO-92
BC212B	0.3	60	50	5	200	200 *	400 *	0.25	200	15	10	10	TO-92
BC213	0.3	45	30	5	200	80 *	600 *	0.25	200	15	10	10	TO-92
BC213A	0.3	45	30	5	200	100 *	300 *	0.25	200	15	10	10	TO-92
BC213B	0.3	45	30	5	200	200 *	400 *	0.25	200	15	10	10	TO-92
BC213C	0.3	45	30	5	200	350 *	600 *	0.25	200	15	10	10	TO-92
BC214	0.3	45	30	5	200	140 *	600 *	0.25	200	15	10	4	TO-92
BC214A	0.3	45	30	5	200	100 *	300 *	0.25	200	15	10	4	TO-92
BC214B	0.3	45	30	5	200	200 *	400 *	0.25	200	15	10	4	TO-92
BC214C	0.3	45	30	5	200	350 *	600 *	0.25	200	15	10	4	TO-92
BC237	0.3	50	45	6	100	125 *	500 *	0.25	150	50	4.5	10	TO-92
BC237A	0.3	50	45	6	100	125 *	260 *	0.25	150	50	4.5	10	TO-92
BC237B	0.3	50	45	6	100	240 *	500 *	0.25	150	50	4.5	10	TO-92
BC238	0.3	30	20	5	100	125 *	900 *	0.25	150	50	4.5	10	TO-92
BC238A	0.3	30	20	5	100	125 *	260 *	0.25	150	50	4.5	10	TO-92
BC238B	0.3	30	20	5	100	240 *	500 *	0.25	150	50	4.5	10	TO-92
BC238C	0.3	30	20	5	100	450 *	900	0.25	150	50	4.5	10	TO-92
BC239	0.3	30	20	5	100	240 *	900	0.25	150	50	4.5	10	TO-92
BC239B	0.3	30	20	5	100	240 *	500	0.25	150	50	4.5	10	TO-92
BC239C	0.3	30	20	5	100	450 *	900	0.25	150	50	4.5	10	TO-92

CASE OUTLINES

SEMICONDUCTORS

DO-7

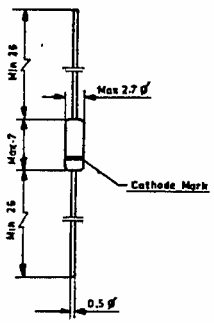

DO-35

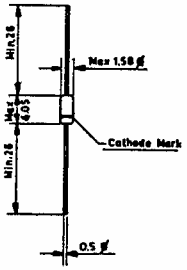

SOT-25

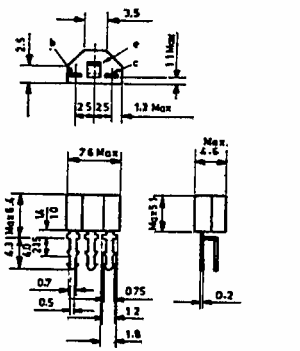

E & B ARE INTERCHANGED FOR SOME DEVICES

TO-3

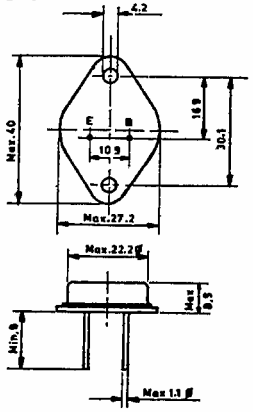

TO-5

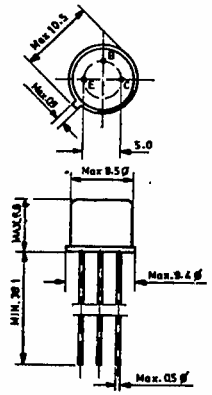

TO-18

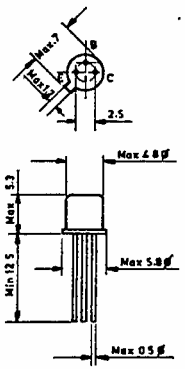

TO-39

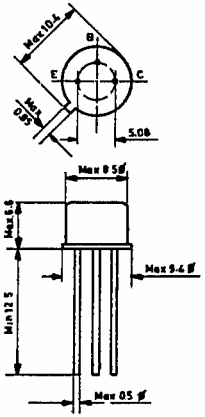

TO-66

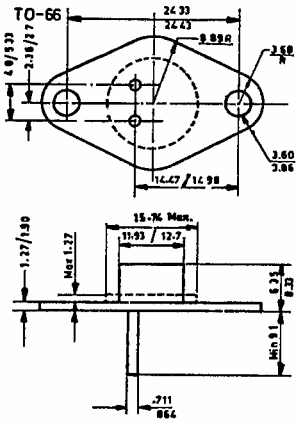

TO-72

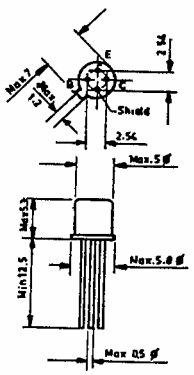

E & B ARE INTERCHANGED FOR SOME DEVICES

TO-92

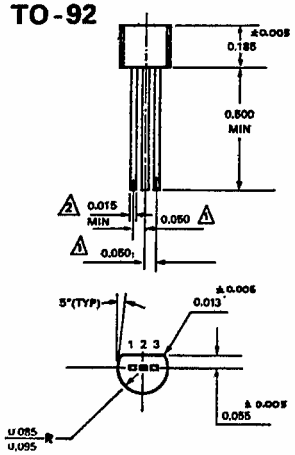

(Dimensions in inches)

Note : Dimensions in mm unless otherwise specified

TO-96

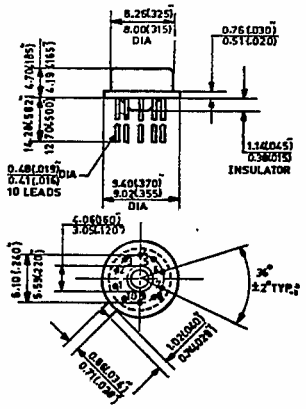

TO-99

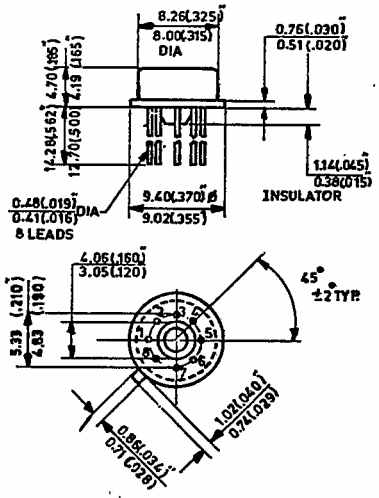

TO-105

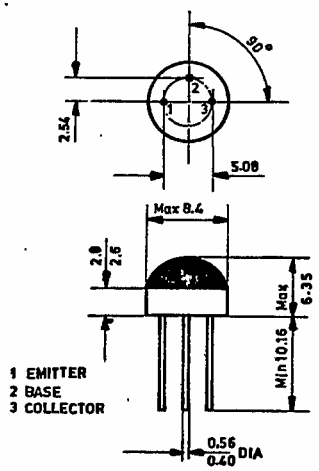

TO-106

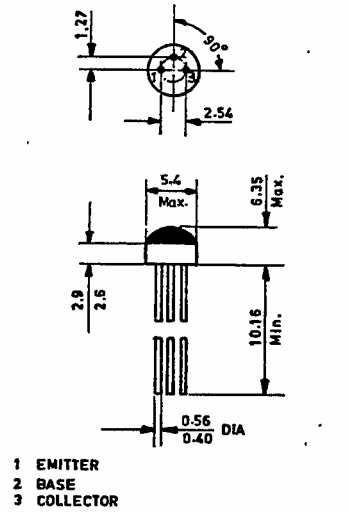

TO-220

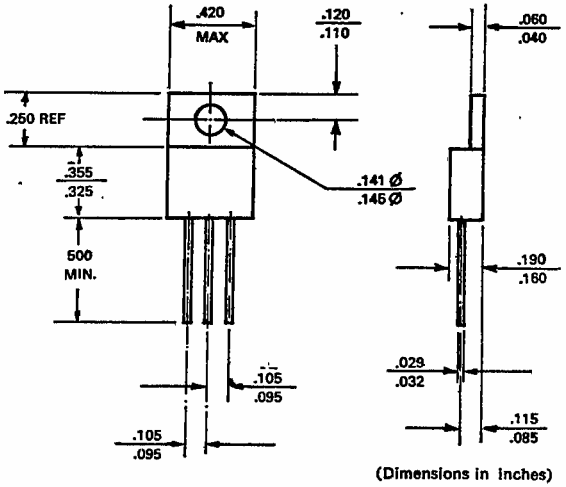

14 pin DIP

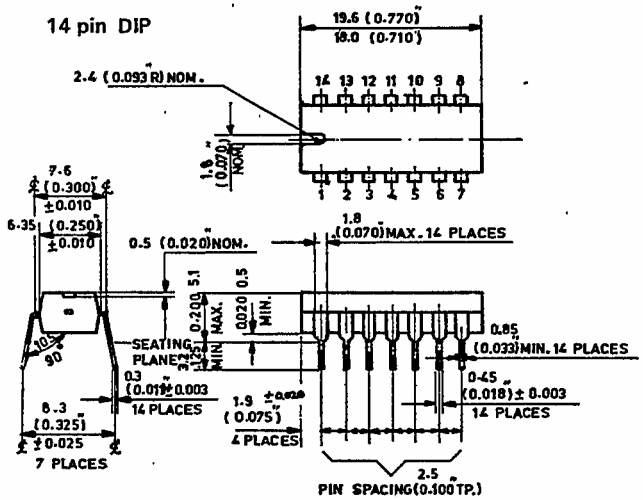

16 pin DIP

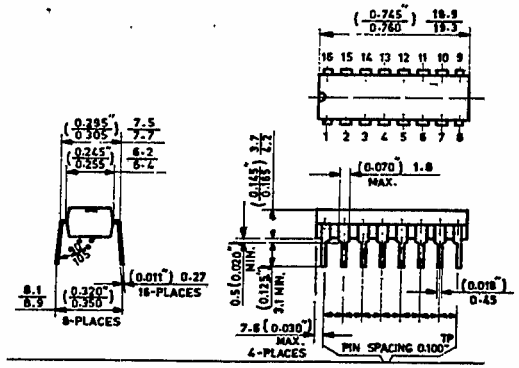

Note : Dimensions in mm unless otherwise specified